Residual current monitor RCMA470LY

AC/DC sensitive residual current monitor

for TN and TT systems (AC, DC and pulsed DC currents)

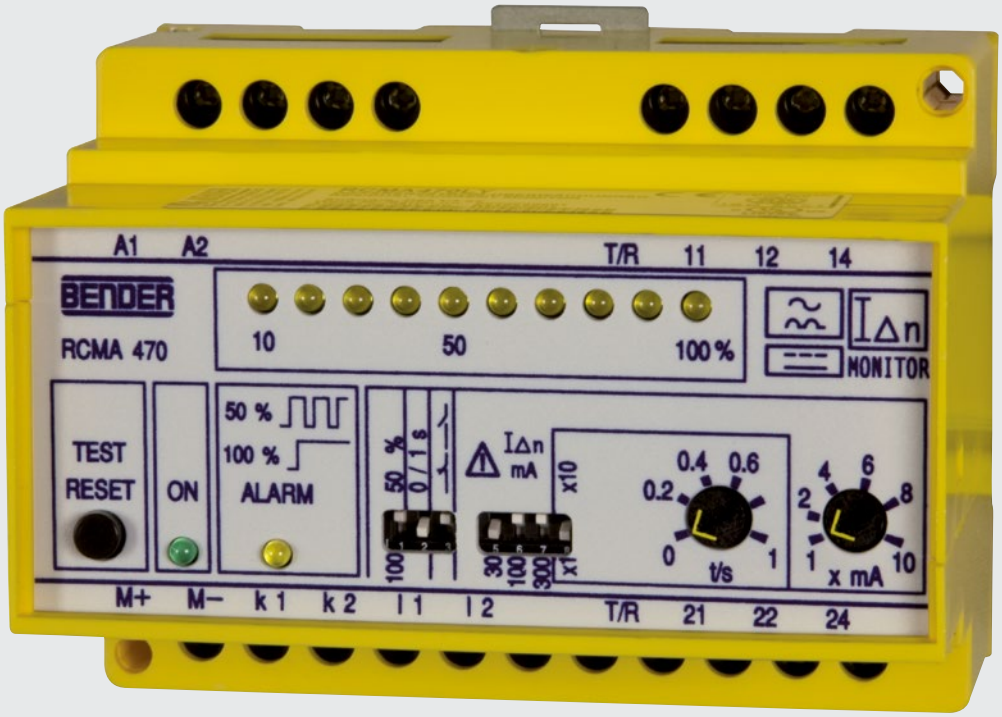

TDB404001en/07.2007

Residual current monitor RCMA470LY

AC / DC sensitive residual current monitor for TN and TT systems (AC, DC and pulsed DC currents)

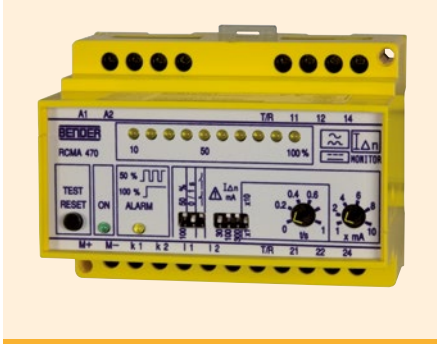

RCMA470LY

Device features

- External measuring current transformer
- Two separately adjustable response values, Alarm $I_{\Delta n1}$: 30 mA…3 A (0…150 Hz), prewarning $I_{\Delta n2}$: 50 %/100 % of $I_{\Delta n1}$
- Adjustable response delay 0…10 s (prewarning 0/1 s)
- Two separate alarm relays with one changeover contact each
- N/O or N/C operation
- Fault memory
- Combined TEST and RESET button
- Connection external TEST and RESET button
- LED bar graph indicator $I_{\Delta n}$ 0…100 %
- Connection external measuring instrument $I_{\Delta n}$ 0…100 %
- CT connection monitoring
- Sealable transparent cover
- Separate supply voltage
- Type B acc. to IEC 60755

Approvals

Product description

The AC/DC sensitive residual current monitor RCMA470LY is designed for monitoring earthed power supply systems (TN and TT systems) where DC fault currents or residual currents continuously greater than zero may occur. These are in particular loads containing six-pulse rectifiers or one way rectifiers with smoothing, such as converters, battery chargers, construction site equipment with frequency-controlled drives.

The prewarning stage (50% of the set response value IΔn1) allow to distinguish between prewarning and alarm. Since the values are measured with measuring current transformers, the device is nearly independent of the load current and the nominal voltage of the system. The device can also be used for busbar systems.

Application

- AC/DC sensitive residual current monitoring in earthed two, three or four conductor systems.
- AC/DC sensitive current monitoring of single conductors de-energized under normal conditions (e. g. N and PE conductors).
- Variable-speed drives
- Uninterruptible power supply systems (UPS)
- Construction site equipment
- Wood working machines
- Battery systems
- Computer tomographs
- Laboratory equipment
- Photovoltaic systems
- Furniture industry
- Sewage works

Function

Residual current monitoring takes place via an external measuring current transformer. When the residual current respectively the current exceeds the set response value, the alarm LED lights and the associated alarm relay switches when the response delay has elapsed.

The alarm messages are stored. The fault memory can be reset by pressing the RESET button. The device function can be tested using the TEST button.

The currently measured value in per cent related to the set response value is shown on the LED bar graph indicator. The CT circuit is continuously monitored. In case of wire breakage, the alarm relay switches and the Power On LED flashes.

Wiring diagram – system connection, external connections

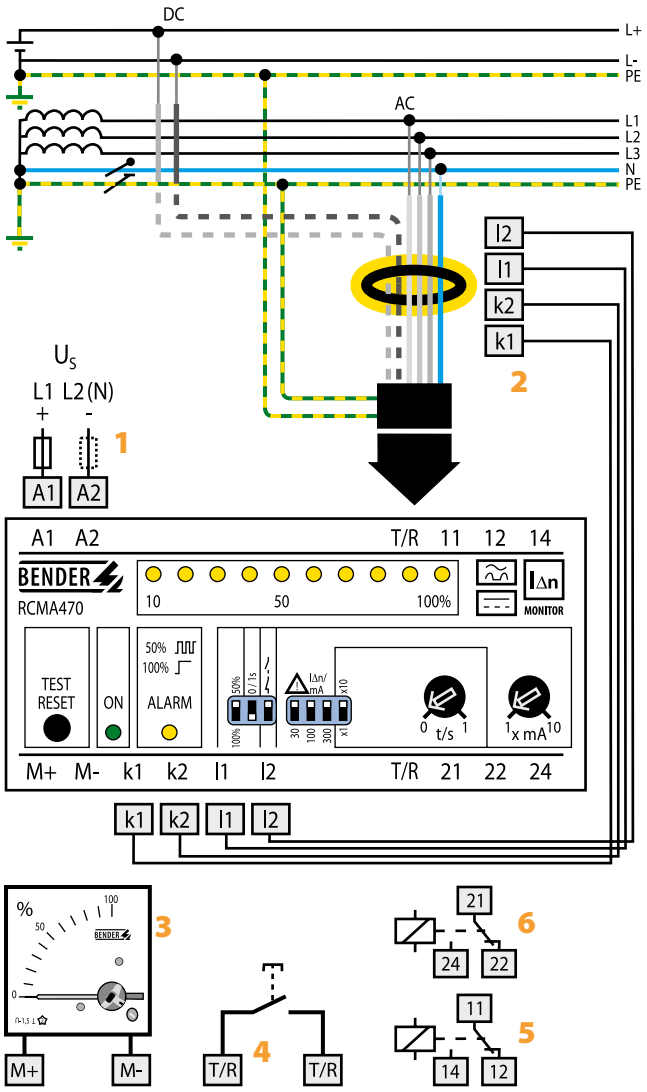

1 - Supply voltage U_S (see ordering information), a 6 A fuse recommended for line protection.

2 - External measuring current transformer W…B

3 - External measuring instrument

4 - External TEST and RESET button

5 - Alarm relay: switches when the fault current exceeds the response value $I_{\Delta n1}$ (alarm) and in case of interruption of the CT connection.

6 - Alarm relay: switches when the fault current exceeds 50% or 100% of the response value $I_{\Delta n1}$.

Do not route the PE conductor through the measuring current transformer!

Wiring diagram – front plate

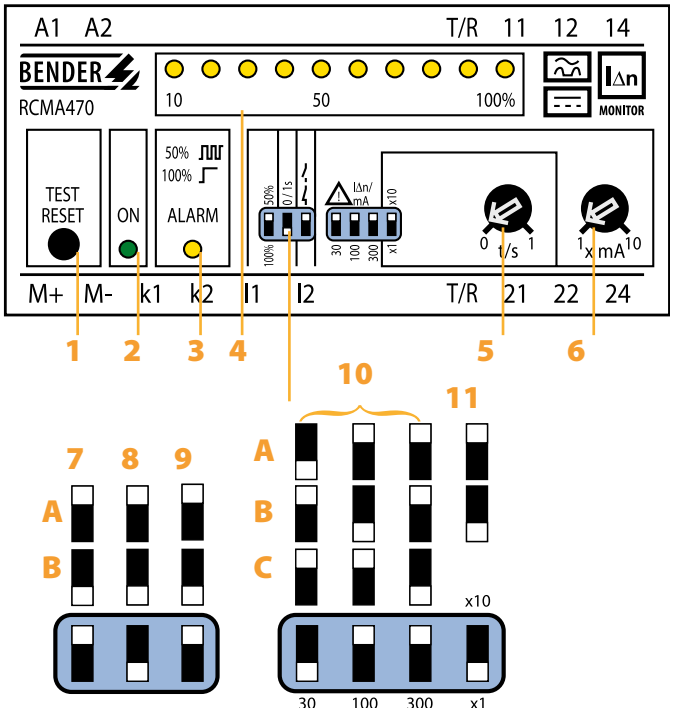

1 - Combined TEST and RESET button: short-time pressing (< 1 s) = RESET, long-time pressing (> 2 s) = TEST.

2 - Power On LED: lights when the device is in operation and flashes in case of interruption of the CT connection, defective CT or when the measuring range is exceeded.

3 - Alarm LED: lights when the fault current exceeds the set response value and flashes when 50 % of the set response value are reached.

4 - LED bar graph indicator, shows the measuring value in per cent related to the preset response value.

5 - Potentiometer for setting the response delay (0…1 s).

6 - Potentiometer for setting the response value (x 1…10 mA).

Setting of the DIP switches (white = switch position)

7 - Prewarning contact 21-22-24
- A - Prewarning at 50% of $I_{\Delta n1}$
- B - Prewarning at 100% of $I_{\Delta n1}$

8 - Response delay prewarning
- A - Delay 1 s
- B - Delay 0 s

9 - Alarm relay
- A - N/O operation
- B - N/C operation

10 - Response range
- A - 30 mA
- B - 100 mA
- C - 300 mA

} x 1…10

Response delay
- A - Setting value $^t/_s$ x 10
- B - Setting value $^t/_s$ x 1

Technical data

Insulation coordination acc. to IEC 60664-1

Rated insulation voltage	AC 250 V
Rated impulse voltage/pollution degree	4 kV/3

Voltage ranges

Supply voltage U_S	see ordering information
Operating range of U_S	0.85…1.1 x U_S
Frequency range of U_S	DC/50…60 Hz
Power consumption	≤ 3.5 VA

Measuring circuit/response values

External measuring current transformer	W…B series
Operating characteristic acc. to IEC 60755	Type B
Rated residual operating current $I_{\Delta n2}$ (prewarning)	50/100 % of $I_{\Delta n1}$
Response delay t_v	0/1 s
Rated residual operating current $I_{\Delta n1}$ (alarm)	30 mA…3 A
Response delay t_v, adjustable	0…10 s
Rated frequency	0…150 Hz
Relative percentage error	0…- 25%
Hysteresis	approx. 25% of the response value
Response time t_{an} at $I_{\Delta n1}$ = 1 x $I_{\Delta n1/2}$ (t_v = 0 s)	< 70 ms
Response time t_{an} at $I_{\Delta n1}$ = 5 x $I_{\Delta n1/2}$ (t_v = 0 s)	< 40 ms

Displays

LED bar graph indicator	0…100 %
LEDs	Power On, prewarning, alarm

Inputs/outputs

TEST and RESET button	internal/external
Cable length external TEST and RESET button	≤ 10 m
Current source for external measuring instrument 0…100 %	DC 0…400 µA
Load	≤ 12.5 kΩ

Cable lengths for measuring current transformers

Single wire ≥ 0.75 mm²	0…10 m

Switching elements

Number of switching elements	2 x 1 changeover contact
Operating principle, adjustable	N/C operation/N/O operation
Electrical endurance, number of cycles	12000
Rated contact voltage	AC 250 V/DC 300 V
Limited making capacity	AC/DC 5 A
Breaking capacity	2 A, AC 230 V, cos phi = 0,4 0.2 A, DC 220 V, L/R = 0.04 s
Fault memory	ON

Environment/EMC

EMC immunity	acc. to EN 61543
EMC emission	acc. to EN 61000-6-4
Shock resistance IEC 60068-2-27 (during operation)	15 g/11 ms
Bumping IEC 60068-2-29 (during transport)	40 g/6 ms
Vibration resistance IEC 60068-2-6 (during operation)	1 g/10…150 Hz
Vibration resistance IEC 60068-2-6 (during transport)	2 g/10…150 Hz
Ambient temperature (during operation)	- 25…+ 70 °C
Ambient temperature (when stored)	- 40…+ 75 °C
Climatic category IEC 60721-3-3	3K5

Connection

Connection	screw terminals
Connection properties	
rigid/flexible	0.2…4/0.2…2.5 mm²
flexible with ferrules without/with plastic collar	0.25…2.5 mm²
Conductor sizes (AWG)	24…12

Other

Operating mode	continuous operation
Mounting	any position
Protection class, internal components (IEC 60529)	IP30
Protection class, terminals (IEC 60529)	IP20
Type of enclosure	X470
Enclosure material	polycarbonate
Screw mounting	2 x M4
DIN rail mounting acc. to	IEC 60715
Flammability class	UL94V-0
Standards	IEC 62020
Instruction leaflet	BP404001
Weight	≤ 350 g

Ordering information

Response range $I_{\Delta n}$	Rated frequency	Time delay	Measuring current transformers	Fault memory	Indication	Supply voltage U_S AC	Supply voltage U_S DC	Type	Art. No.
30 mA…3 A	0…150 Hz	0…10 s	W35B, W60B	internal/ external	■	230 V	–	RCMA470LY	B 9404 2001[3)]
						90…132 V[1)]	–	RCMA470LY-13	B 9404 2003[3)]
						–	9,6…84 V[1)]	RCMA470LY-21	B 9404 2008[2)]
						–	77…286 V[1)]	RCMA470LY-23	B 9404 2009[2)]

Other supply voltages on request

[1)] Absolute values of the operating range, [2)] For industrial application only, [3)] For industrial and household applications.

Accessories

External measuring current transformers		
Inside diameter (mm)	Type	Art. No.
ø 35	W35B	B 9808 0013
ø 60	W60B	B 9808 0021

Measuring converter			
Input	Output	Type	Art. No.
0…400 µA	0…10 V / 0/4…20 mA	RK170	B 9804 1500

External measuring instrument			
Display range	Size (mm)	Type	Art. No.
0…100 %	96 x 96	9604-4241	B 986 807

Conditions of operation according to IEC 62020, IEC 60755 amendment 2, Type B

Type of current	Wave form	Tripping current
Alternating currents (50 Hz)		0,5…1 x $I_{\Delta n}$
Pulsed DC residual currents (positive and negative half waves) half-wave current		0,5…1,4 x $I_{\Delta n}$
Phase-controlled half-wave currents Current delay angle 90° el/135° el	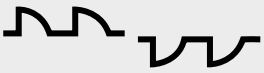	0,5…1,4 x $I_{\Delta n}$
Half-wave current superimposed by a smooth direct current of 6 mA		0,5…1,4 x $I_{\Delta n}$
Smooth DC residual current		0,5…2 x $I_{\Delta n}$

Dimension diagram X470

Dimensions in mm

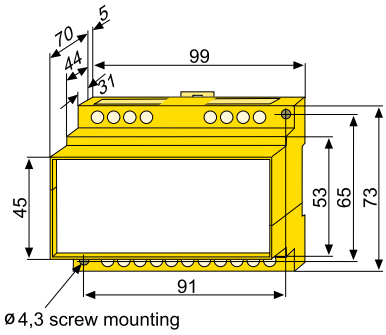

Bender GmbH & Co. KG
P.O. Box 1161 • 35301 Gruenberg • Germany
Londorfer Strasse 65 • 35305 Gruenberg • Germany
Tel.: +49 6401 807-0 • Fax: +49 6401 807-259
E-Mail: info@bender.de • www.bender.de

BENDER Group